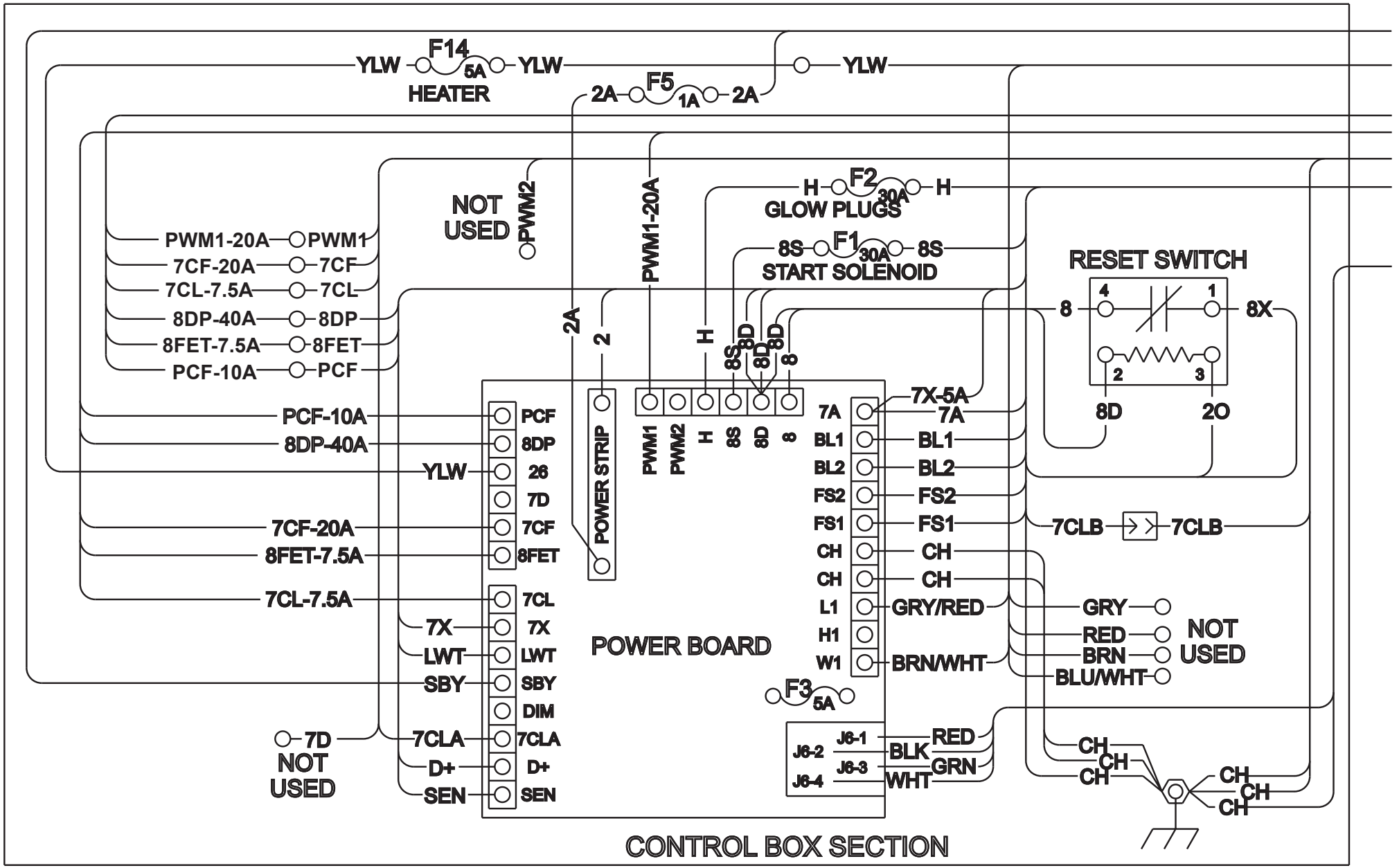
F14
5A
YLW
YLW
HEATER
F5
2A
1A
2A
YLW
F2
30A
H
H
GLOW PLUGS
F1
30A
8S
8S
START SOLENOID
NOT USED
PWM2
PWM1-20A
PWM1-20A
PWM1
7CF-20A
7CF
7CL-7.5A
7CL
8DP-40A
8DP
8FET-7.5A
8FET
PCF-10A
PCF
2A
2
H
8S
8D
8D
8
RESET SWITCH
8
4
1
8X
2
3
8D
2O
PCF-10A
8DP-40A
YLW
7CF-20A
8FET-7.5A
7CL-7.5A
PCF
8DP
26
7D
7CF
8FET
7CL
7X
LWT
SBY
DIM
7CLA
D+
SEN
POWER STRIP
PWM1
PWM2
H
8S
8D
8
7A
BL1
BL2
FS2
FS1
CH
CH
L1
H1
W1
7X-5A
7A
BL1
BL2
FS2
FS1
CH
CH
GRY/RED
BRN/WHT
7CLB
7CLB
GRY
RED
BRN
BLU/WHT
NOT USED
POWER BOARD
F3
5A
7D
NOT USED
J6-1
J6-2
J6-3
J6-4
RED
BLK
GRN
WHT
CH
CH
CH
CH
CH
CH
CONTROL BOX SECTION